FERMILAB ENGINEERING NOTE	SECTION	PROJECT	SERIAL - CATEGORY	PAGE

SUBJECT

RACK PROTECTION MONITOR

SMOKE, TEMPERATURE AND VENTILATION - POWER TRIP

NAME		
S. ORR		
DATE	REVISION DATE	
1NOV95	1NOV97	

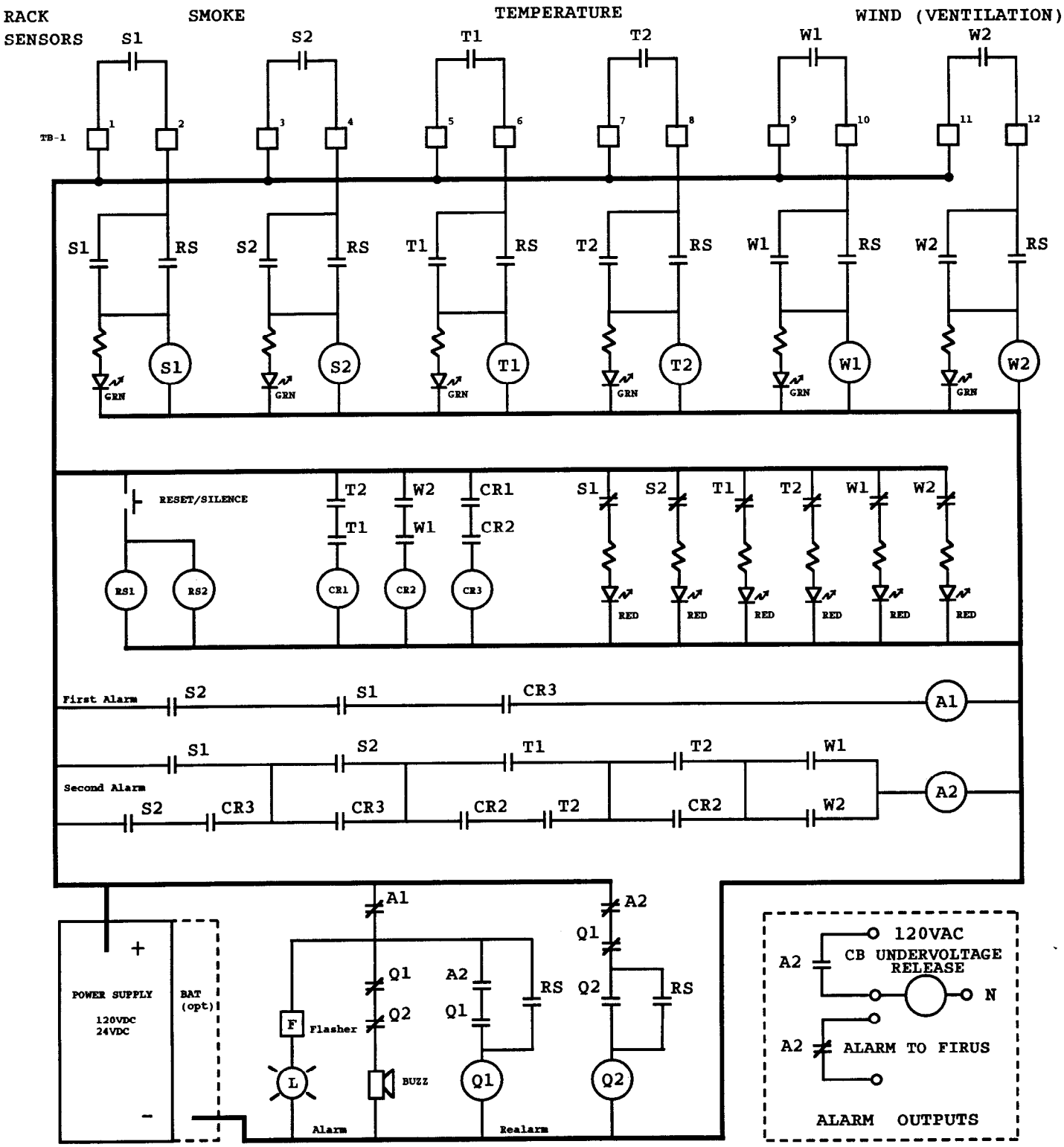

FERMILAB
ENGINEERING NOTE

SECTION	PROJECT	SERIAL-CATEGORY	PAGE
			2

SUBJECT: FASTBUS PROTECTION CHASSIS

NAME: S. ORR

DATE: 1 NOV 95

REVISION DATE:

FASTBUS PROTECTION CHASSIS — FUNCTIONAL SCHEMATIC

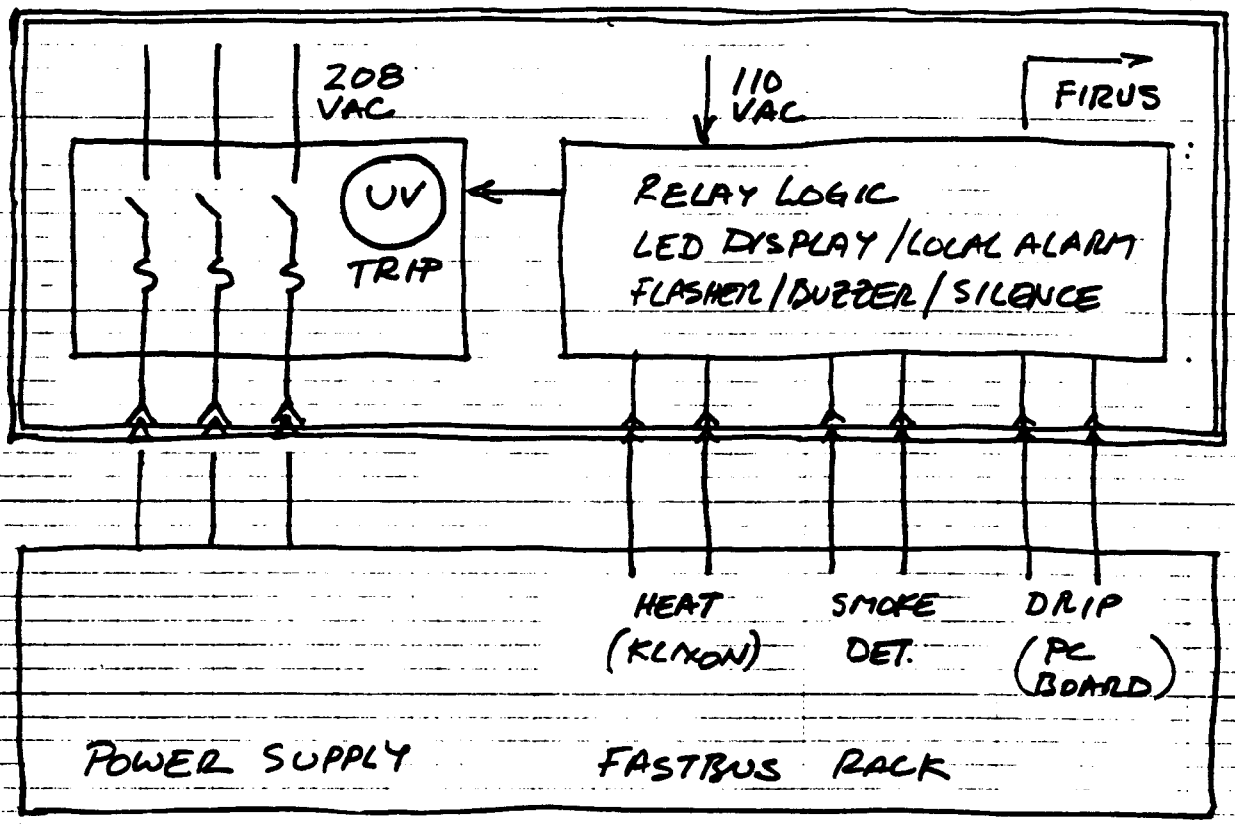

FRONT VIEW

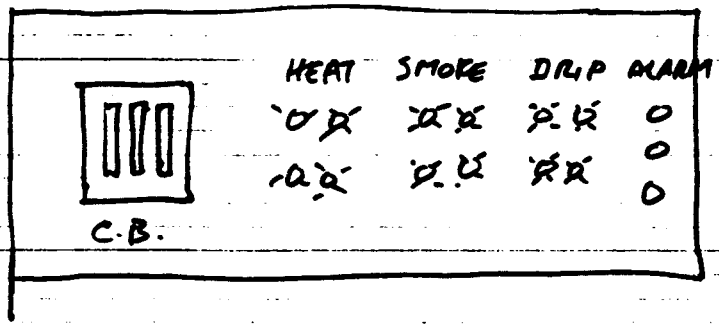

REAR VIEW

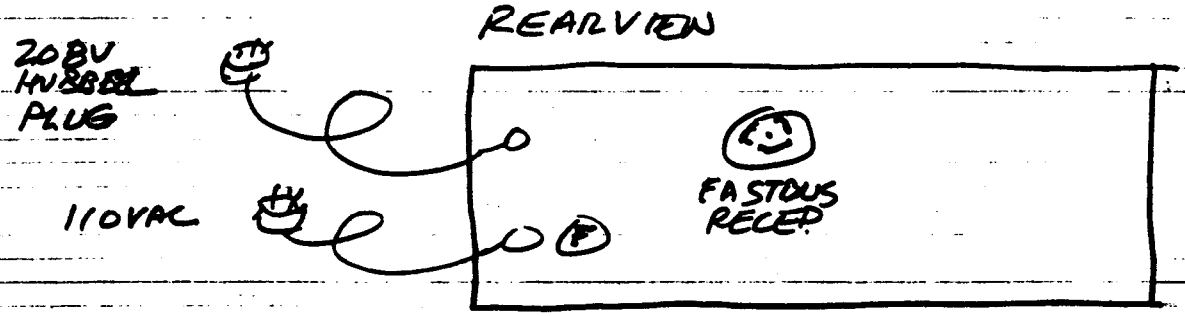

FERMILAB ENGINEERING NOTE	SECTION	PROJECT	SERIAL - CATEGORY	PAGE 1

SUBJECT	NAME	
FAST BUS PROTECTION CHASSIS (HEAT, DRIP, & SMOKE DETECTOR - POWER TRIP)	S. Orr	
	DATE 21OCT95	REVISION DATE

WHAT IT DOES

DETECTS OVERTEMP, WATER DRIP, OR SMOKE IN FASTBUS RACK - SHUTS OFF POWER , PROVIDES LOCAL ALARM AND FIRUS ALARM.

HOW IT WORKS

SMOKE, HEAT AND DRIP SENSORS - TWO OF EACH - ARE THE INPUTS. ANY ' FIRST ALARM' (EXAMPLE : ONE HEAT DETECTOR) TURNS ON A BUZZER AND A FLASHING LIGHT. IT CAN BE RESET OR SILENCED. ANY 'SECOND ALARM' (EXAMPLE: A SMOKE DETECTOR OR ANOTHER HEAT DETECTOR) WILL TURN OFF THE FASTBUS POWER AND SEND THE ALARM TO FIRUS.

FEATURES

THE INPUTS ARE CONDITIONED TO 'FAIL SAFE'. A 'CLOSED-CONTACT -GOING-OPEN' DROPS A LATCHED RELAY.

THE STATUS LEDS CHANGE FROM GREEN TO RED DURING ALARM. A 'RESET' MAKES UP WHEN ALL CONDITIONS ARE NORMAL.

IF THE 'FIRST ALARM' IS ACKNOWLEDGED AND SILENCED - THE CHASSIS WILL 'RE-ALARM' IF A SECOND ALARM OCCURS - THE BUZZER AND LOCAL FLASHING LIGHT WILL TURN ON AGAIN.

THE POWER SHUTDOWN OPERATES BY THE DROPOUT OF AN UNDERVOLTAGE-RELEASE CIRCUIT BREAKER FEATURE. ALL THE RELAYS ARE POWERED FOR 'FAIL SAFE' DROPOUT.

AFTER A 'SECOND LEVEL ALARM' - THE POWER WILL NOT 'SELF RESTORE' - IT NEEDS TO BE RESET AT THE CIRCUIT BREAKER.

CONCLUSION

REDUNDANT SENSORS PROTECT AGAINST NUISANCE TRIPS.

THE TWO LEVEL ALARM CRITERIA IS IMPLEMENTED IN VERY SIMPLE AND RUGGED HARDWARE - ALARMS FROM THIS CHASSIS ARE MEANT TO BE TAKEN SERIOUSLY !

FERMILAB
ENGINEERING NOTE

SECTION	PROJECT	SERIAL - CATEGORY	PAGE

SUBJECT
RACK PROTECTION CHASSIS
HEAT & SMOKE DETECTOR - POWER TRIP

NAME: S. ORR

DATE: 1 OCT 97
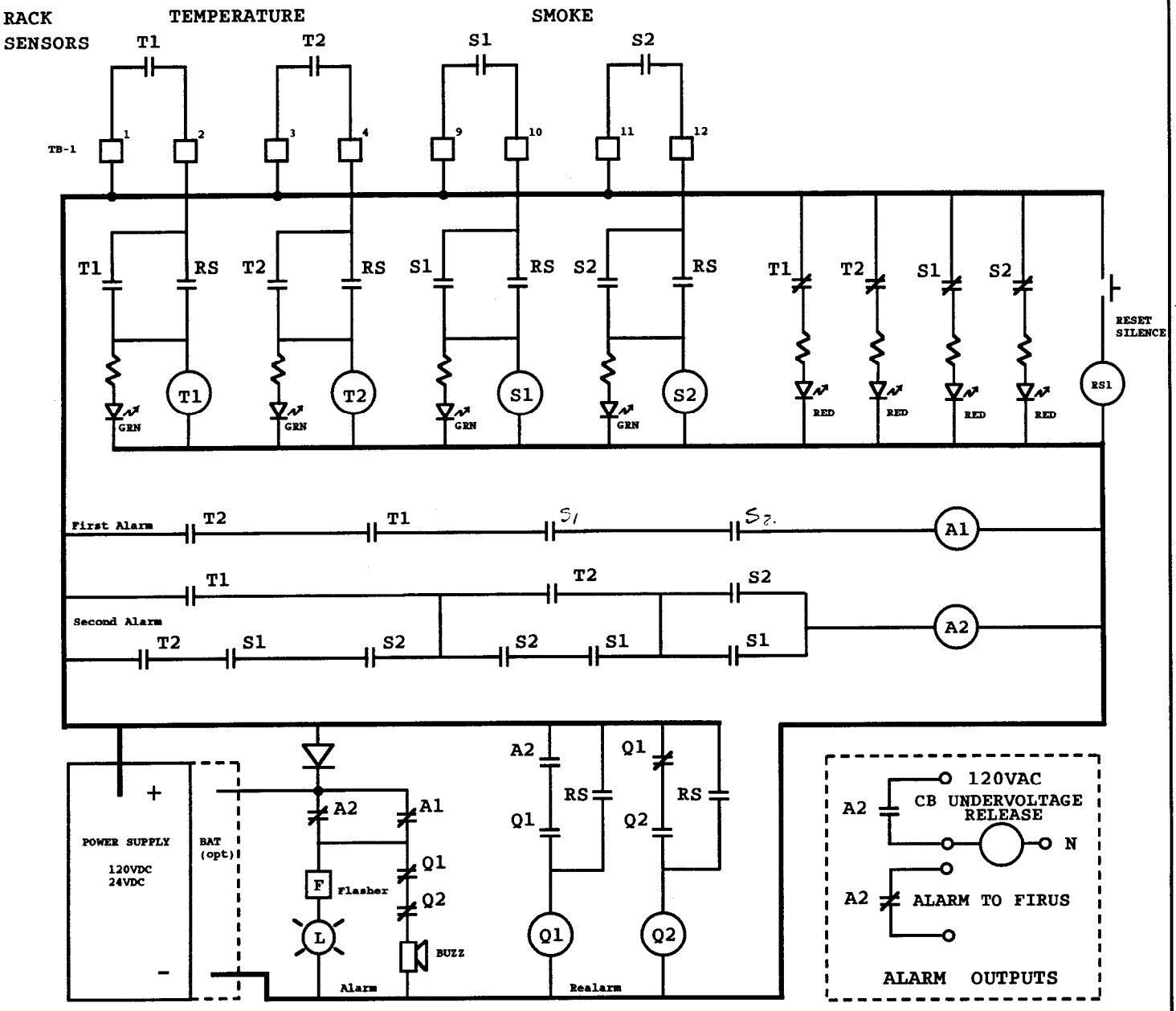
REVISION DATE: